GAST/JUN-AIR®

[illegible]

PART NUMBER: RTD987

REVISION: C

PRODUCT SPECIFICATIONS

MODEL NO.	MOTOR	RPM		AMPS		HP	KW	NET WT.		CAPACITOR	
		60HZ	50HZ	60HZ	50HZ			lbs.	kg	mfd.	VOLT
86R136-301BR-N070X	230/115/200/100 (50Hz) 208-230/200-240 (50Hz)	1725	1425	1.6/0.9	1.8/1.0	1/8	0.09	14.9	6.8	17.5	370

SOUND LEVEL: LESS THAN 65 dbA

NORMAL AMBIENT: -5°C - +40°C

RELATIVE HUMIDITY: 30% - 80%

ENVIRONMENT: CLEAN DUST FREE

NOTES:
1. TECHNICAL DATA SUBJECT TO CHANGE WITHOUT NOTICE.
2. THIS PUMP MUST BE INSTALLED IN AN ENCLOSURE.
3. ALL DIMENSIONS ARE FOR REFERENCE ONLY.
4. KIT P/N: K980.
5. K982 ELECTRICAL KIT INCLUDED.
6. PVP PENDING.

PRODUCT PERFORMANCE:

60Hz CURVES BASED ON 115V.
50Hz CURVES BASED ON 100V.

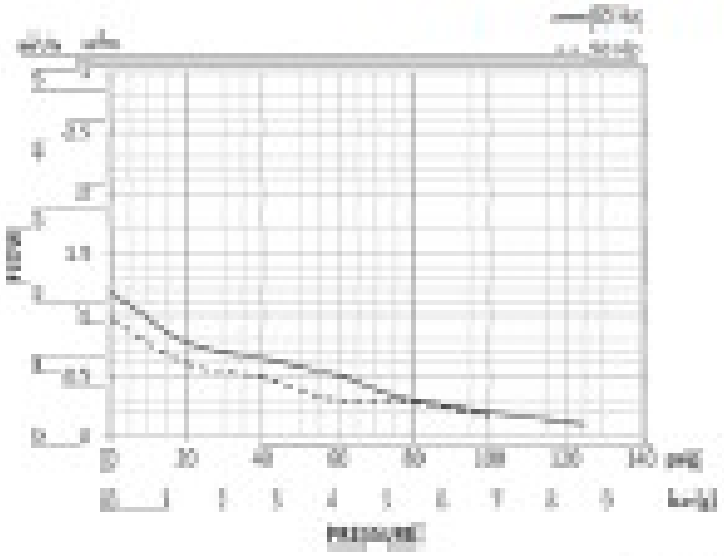
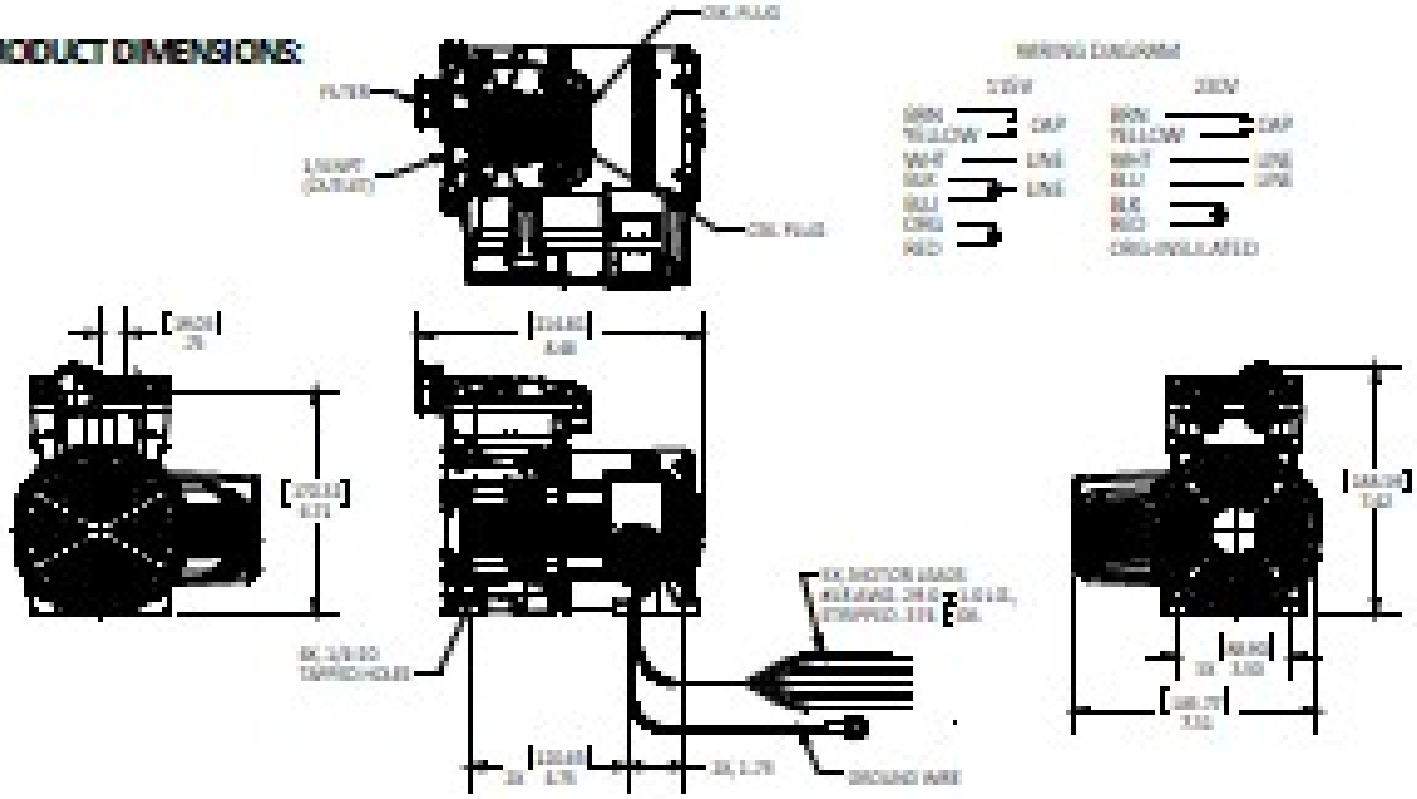
PRODUCT DIMENSIONS: